AMSTRAD

sinclair

SPECTRUM +2B/+3B

AMENDMENT
SERVICE MANUAL

CONTENTS

	Page
SPECTRUM +2B SECTION	3
Electrical Parts List	3
Cabinet Exploded View & Parts List	4
Cassette Mechanism & Parts List	5
Deck P.C.B., Cassette Interface	6, 7
Main P.C.B.	8
SPECTRUM +/3B SECTION	9
Electrical Parts List	9
Cabinet Exploded View & Parts List	10
Floppy Disk Interface	11
+2B / +3B Schematic Diagram	12

AMSTRAD PLC
FLEET HOUSE, RIVER WAY, HARLOW, ESSEX CM20 2EE.
Telephone: 0279 454546. Fax: 0279 454500. Telex: 817649.

SPECTRUM +3B FLOPPY DISK INTERFACE

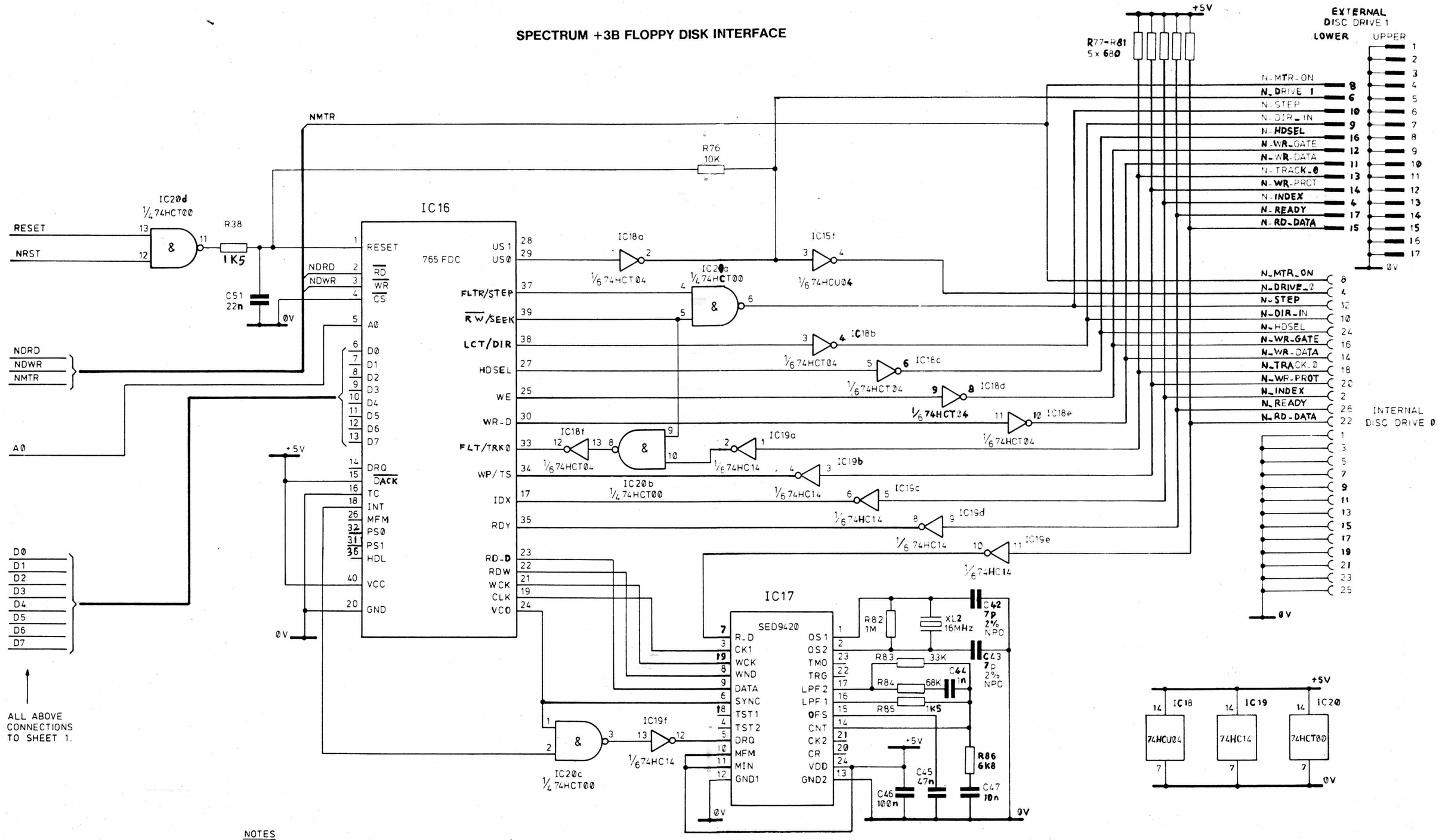

NOTES

1 ALL CIRCUITRY ON THIS SHEET IS APPLICABLE TO SPECTRUM +3B ONLY

SPECTRUM +2B / +3B SCHEMATIC DIAGRAM

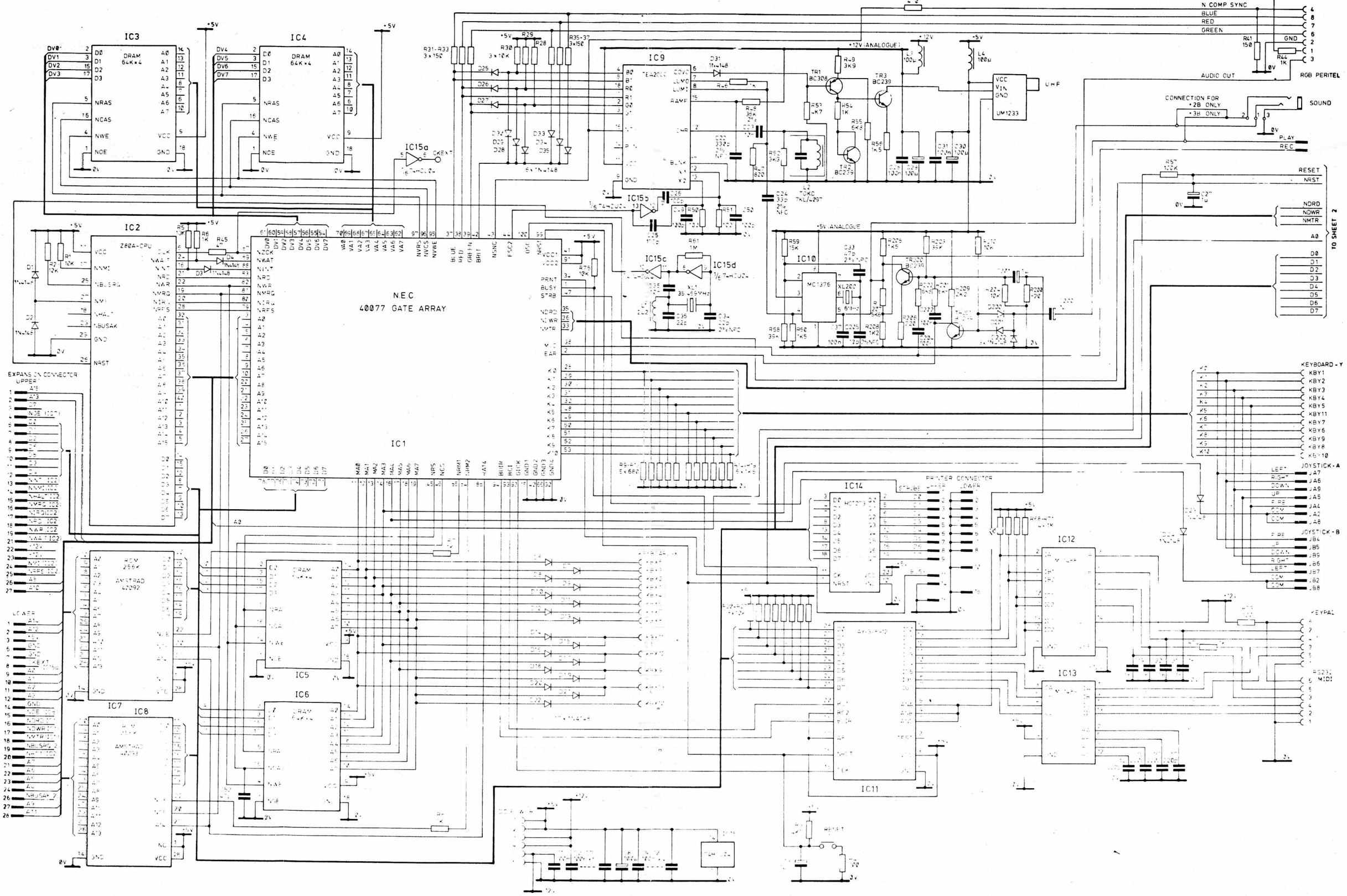

SPECTRUM +2B ELECTRICAL PARTS LIST

Description	Ref. No.	Part No.
Resistors		
100Ω	R4, 50, 51, 73	10032
150Ω	R31-33, 35-37, 41	10036
180Ω	R102	10038
220Ω	R206	10040
470Ω	R34	10048
560Ω	R121, 327	10050
680Ω	R9-13	10052
820Ω	R47, 118, 200	10054
1kΩ	R6-8, 44, 46, 54, 68-71, 74	10061
1.2kΩ	R115, 208	10063
1.5kΩ	R14-19, 56, 60, 205	10065
2kΩ	R120	172187
2.2kΩ	R201, 209	10069
3.3kΩ	R52, 111	10070
3.9kΩ	R49	10075
4.7kΩ	R3, 53, 114	10077
5.6kΩ	R101, 207	10079
6.8kΩ	R55, 202	10081
8.2kΩ	R116	10083
10kΩ	R1, 2, 5, 20-30, 75, 103, 107, 117, 204, 210	10085
12kΩ	R109	10087
15kΩ	R59	10089
18kΩ	R104, 106	10091
33kΩ	R108, 110	10097
36kΩ	R48, 113	176527
39kΩ	R58, 203	10099
68kΩ	R119	10105
100kΩ	R57	10109
1MΩ	R61, 100, 105, 112	10147
Ceramic Capacitors		
10pF NPO	C205	177366
22pF NPO	C34	177369
22pF	C36	150511
33pF NPO	C24	177370
47pF NPO	C33, 52	172177
56pF NPO	C112	172178
100pF NPO	C25, 26, 49, 50	177373
150pF	C104	151304
200pF 50V	C107	172179
220pF	C14-17	400107
330pF NPO	C22	172180
330pF	C53	150518
0.001μF	C18-21	150910
0.01μF	C23, 35	810312
0.1μF	C1-12, 28, 31, 37, 108, 202, 204	21019
Electrolytic Capacitors		
1μF/16V	C13, 27, 103, 200, 201	172181
10μF/25V	C109	172184
100μF/16V	C8, 29, 30, 105	20028
470μF/10V	C110	170424
Barrier Layer		
0.001μF	C101	172182
0.022μF	C100, 102, 111	172185

Ref. No.	Description	Part No.
IC's		
IC1	IC Gate Array AMS40077	40077
IC2	IC Z80A CPU	40080
IC3-6	IC TMS4464-12 64 x 4 D-RAM	40239
,IC7	IC AMS40092 ROM	40092
IC8	IC AMS40093 ROM	40093
IC9	IC TEA2000	172048
IC10	IC MC1376	172049
IC11	IC AY-3-8912A	173121
IC12	IC MC1488 Serial Driver	172039
IC13	IC MC1489 Serial Receiver	172038
IC14	IC 74HCT273	173004
IC15	IC 74HC004	40008/A
IC100	IC LA6324	170112
Transistors		
TR1	TR BC308B/BC558B	172032
TR2, 3, 100, 200, 201	TR BC239C/BC549B	50008
Diodes		
D1-4, 6-31, 33-33-35, 200-202	D IN4148	190715
	LED Red	172004
Crystals		
X1	Crystal 35.4690MHz	172067
X200	Resonator ~~X~~MHz 6	173035
Miscellaneous		
	Modulator UHF UM1233E36	172020
Coils		
L1	Coil 2.2uH	172058
L3, 4, 100, 101	Coil 100uH	172060
L2	Coil R.F. Choke TOKO 7KL	173016

SPECTRUM +2B CABINET PARTS LIST

Ref.	Description	Part No.
1	Cabinet Top Assembly	172173
2	Cabinet Bottom Assembly	172174
3	Cassette Door	172152
3	Cassette Door Assembly	172156
3/2	Inlay	172153
4-9	Cassette Key	172150
12	Door Open Spring	172157
14	Shaft Cassette Key	172158
15	Record Switch Plate	172159
18	Push Switch Rec. Cassette PCB	172166
19	6 Pin DC Socket	173026
23	Gun Foot	172161
27	Switch Knob	172151
33	9 Way D Plug (Joystick Socket)	173015
34	6 Way BT Socket	172022
35	3.5MM Stereo Jack Socket	170024
37	8 Pin DIN Socket (RGB Perital)	172021
38	Push Switch Reset Main PCB	172017
	Switch Keyboard Assembly	173019
	Cassette Deck Assembly	172006
Miscellaneous		
	Power Supply Assembly	172172
	Aerial Lead	172065

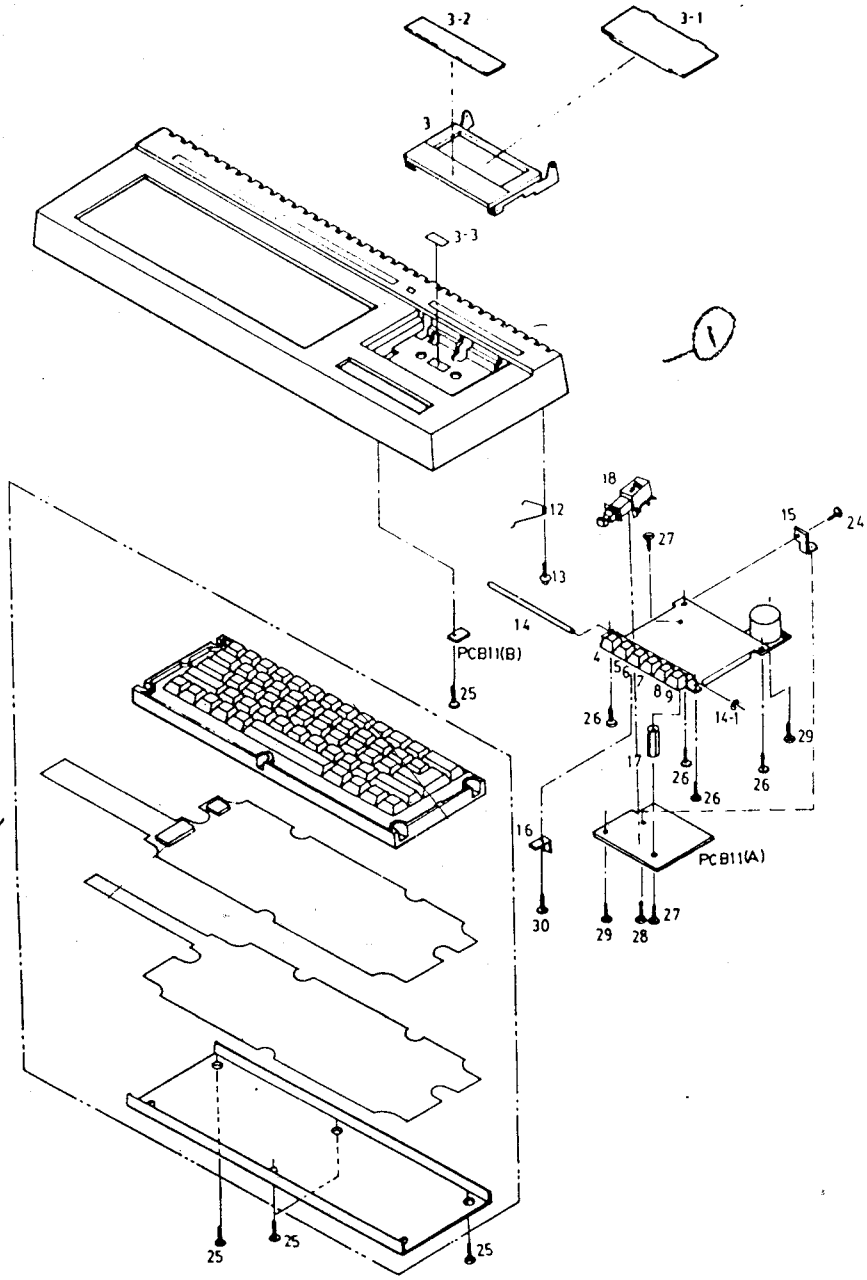

KEY BOARD ASS'Y

SPECTRUM +2B CABINET EXPLODED VIEW

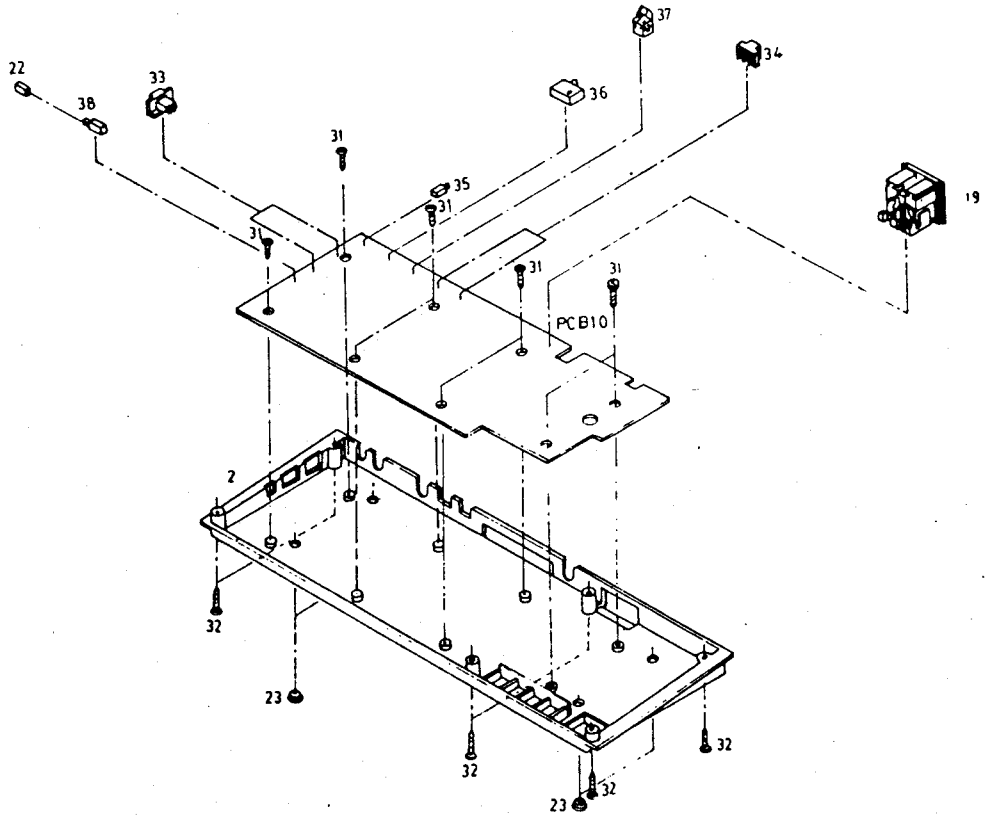

SPECTRUM +2B CASSETTE INTERFACE

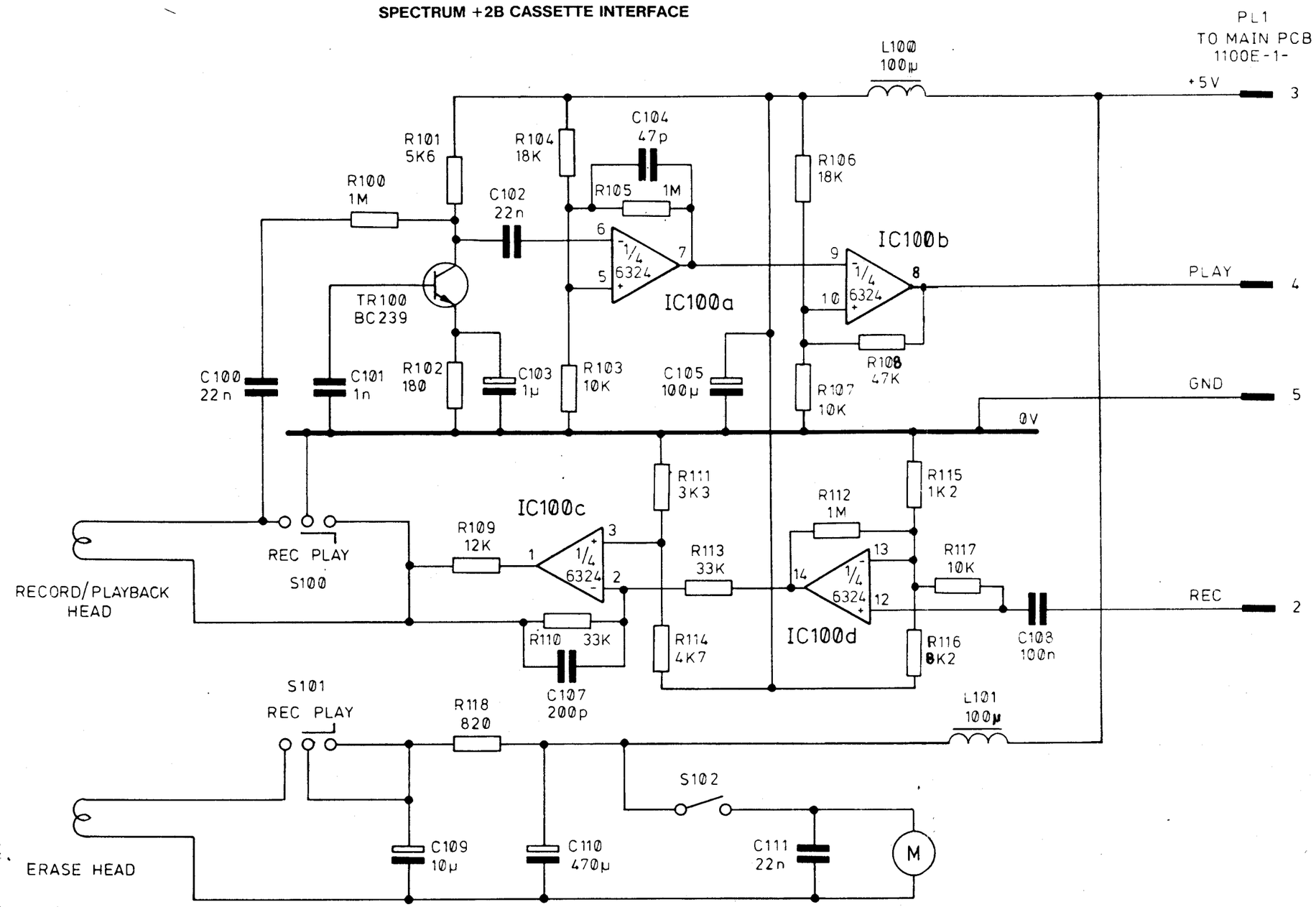

SPECTRUM +2B DECK P.C.B.

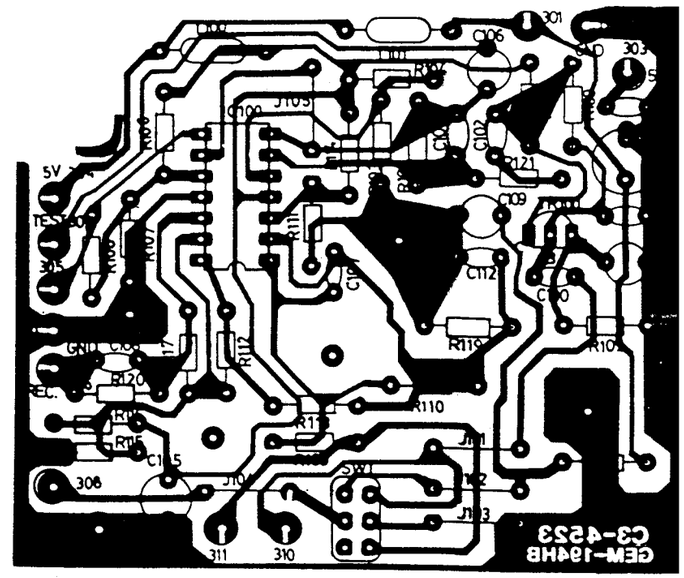

SPECTRUM +2B
CASSETTE MECHANISM PARTS LIST

Ref.	Description	Part No.
1	Erase Head	170202
2	Rec/Play Head	170201
3	Motor 6V DC	172027
4	Clutch Belt	172028
5	Main Belt	172029
6	Pinch Roller	172030

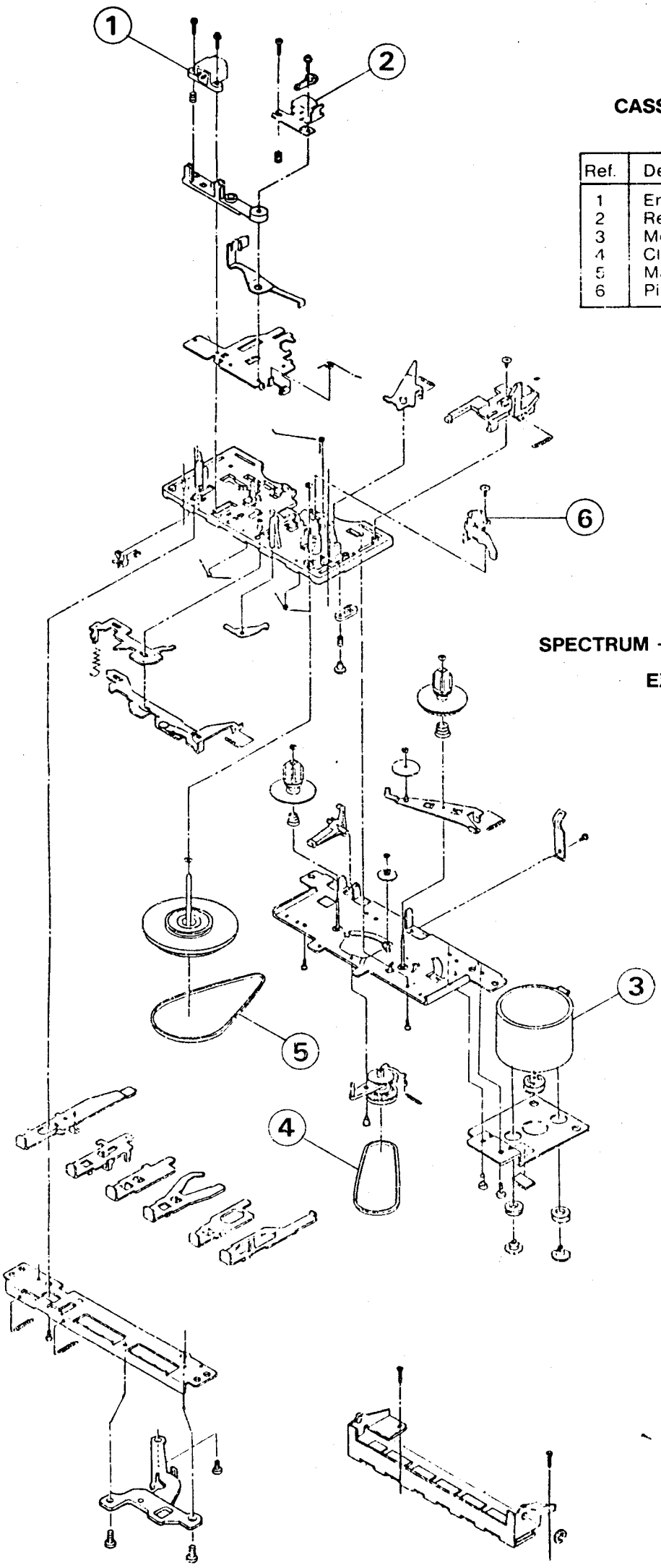

SPECTRUM +2B CASSETTE MECHANISM

EXPLODED VIEW

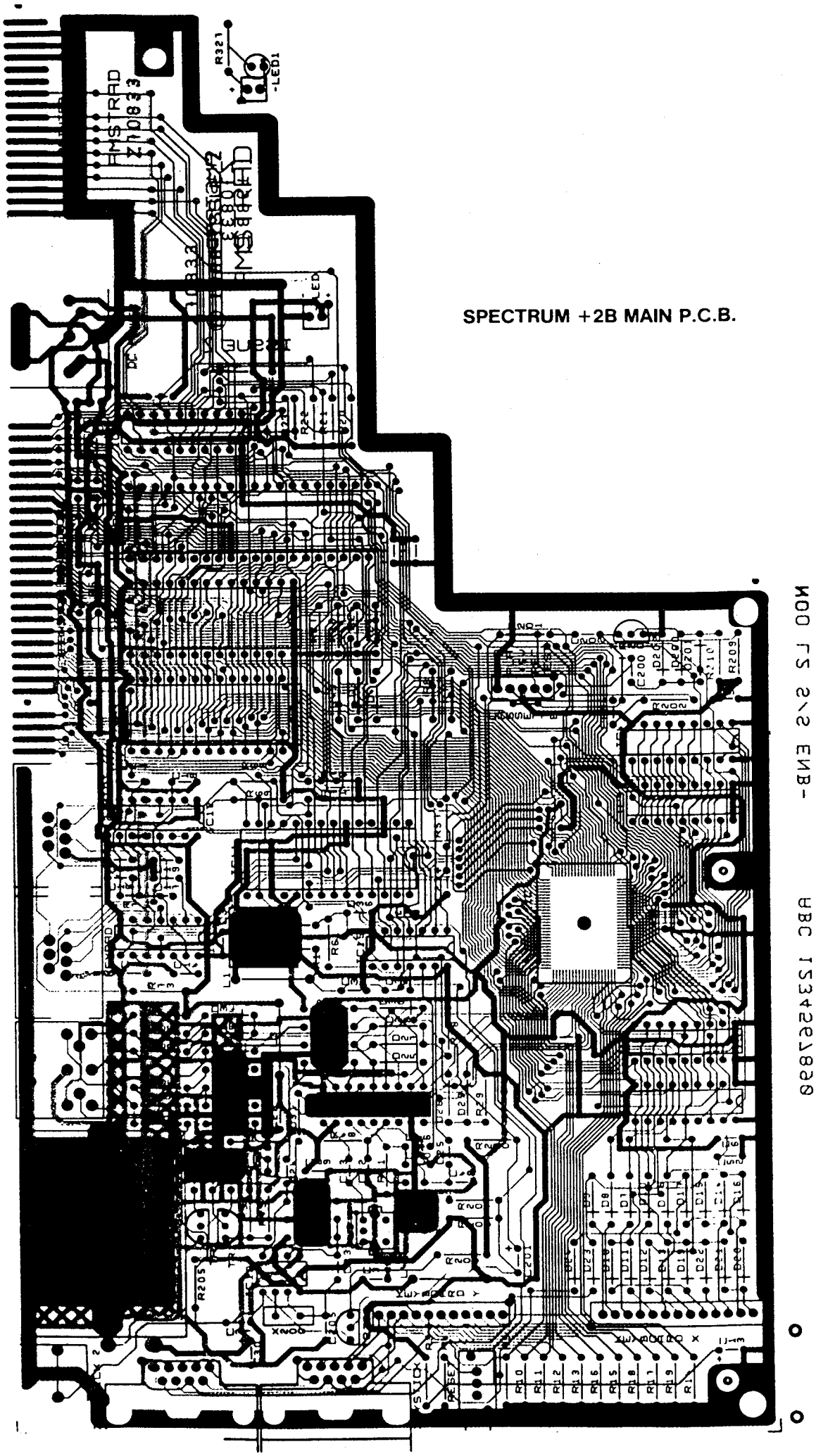

SPECTRUM +2B MAIN P.C.B.

SPECTRUM +3 ELECTRICAL PARTS LIST

Ref. No.	Description	Part No.
IC's		
IC1	IC AMS40077 Gate Array	40077
IC2	IC Z80A CPU	40080
IC3-6	IC M5M4464-15/64 x 4 DRAM (18)	40239
IC7	IC 256K ROM VER 1 AMS40092	40092
IC8	IC 256K ROM VER 2 AMS40093	40093
IC9	IC TEA2000	172048
IC10	IC MC1376	172049
IC11	IC AY-3-8912A	173121
IC12	IC MC1488 RS232 DRIVER	172039
IC13	IC MC1489 RS232 RECEIVER	172038
IC14	IC 74HCT273	173004
IC15	IC 74HCU04	40008/A
IC16	IC UPD765AC F.D.C.	40018
IC17	IC SED9420 D.SR	171034
IC18	IC 74HCT04	173008
IC19	IC 74HC14	171033
IC20	IC 74HCT00	173010
Transistors		
TR1	TR B308B/BC558B	172032
TR2, 3, 200, 201	TR BC239B/BC549B	50008
Diodes		
D1-35, 200, 202	D IN4148	190715
Crystals		
X1	Quartz Crystal 35.4690MHz	172067
X2	Ceramic Resonator 16.00MHz	
X200	Ceramic Resonator 6.0MHz	173011
Coils		
L1	Coil 2.2uH	172058
L2	Coil Choke TOKO 7KL PF291 4.43MHz	173016

NOTE: INFORMATION NOT LISTED IN THIS AMENDMENT WILL BE FOUND IN THE ORIGINAL MANUAL.

SPECTRUM +3 CABINET PARTS LIST

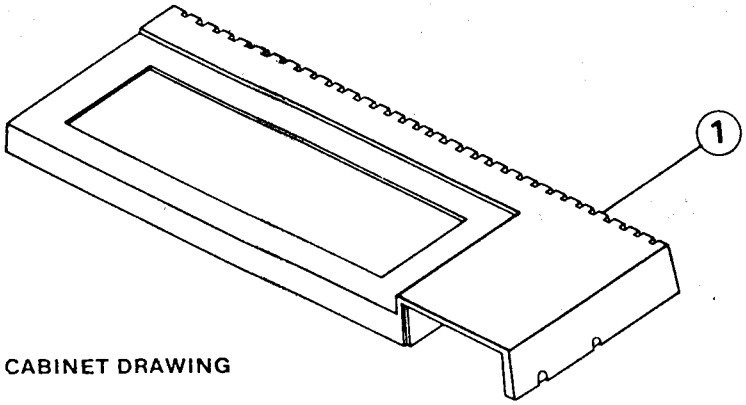

CABINET DRAWING

Ref.	Description	Part No.
1	Top Cabinet	173119
2	Switch Keyboard ABS	173019
3	Floppy Disk Drive	190005
5	Bracket Disk Drive	173021
6	3.5mm Stereo Jack I/O Socket	170022
7	Modulator UHF UM1233 E36	172020
8	8 Way DIN Socket	172021
10	6 Pin DC Socket	173026
11	9 Way D Plug	173015
12	Push Switch Reset	172017
12	Button Reset	172186
13	Bottom Cabinet	173120
	Gun Foot	172161
	6 Way BT Socket	172022
	Power Supply Assembly	173034

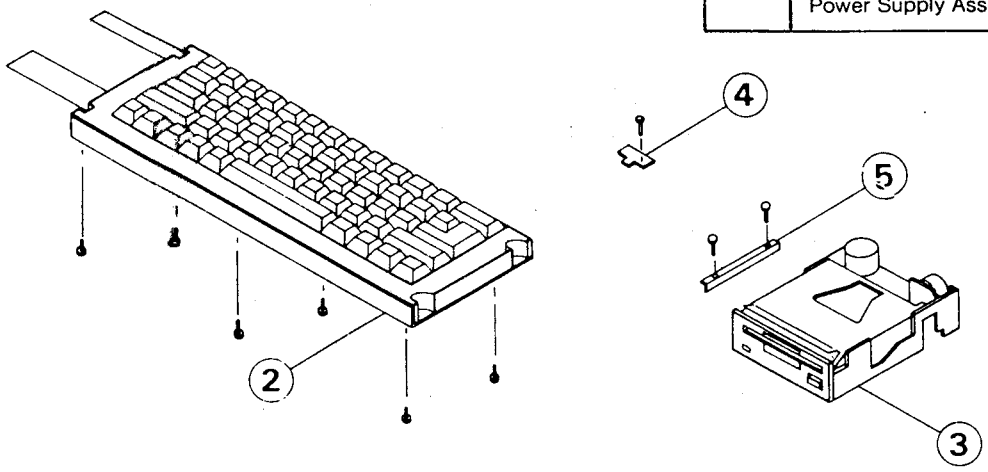

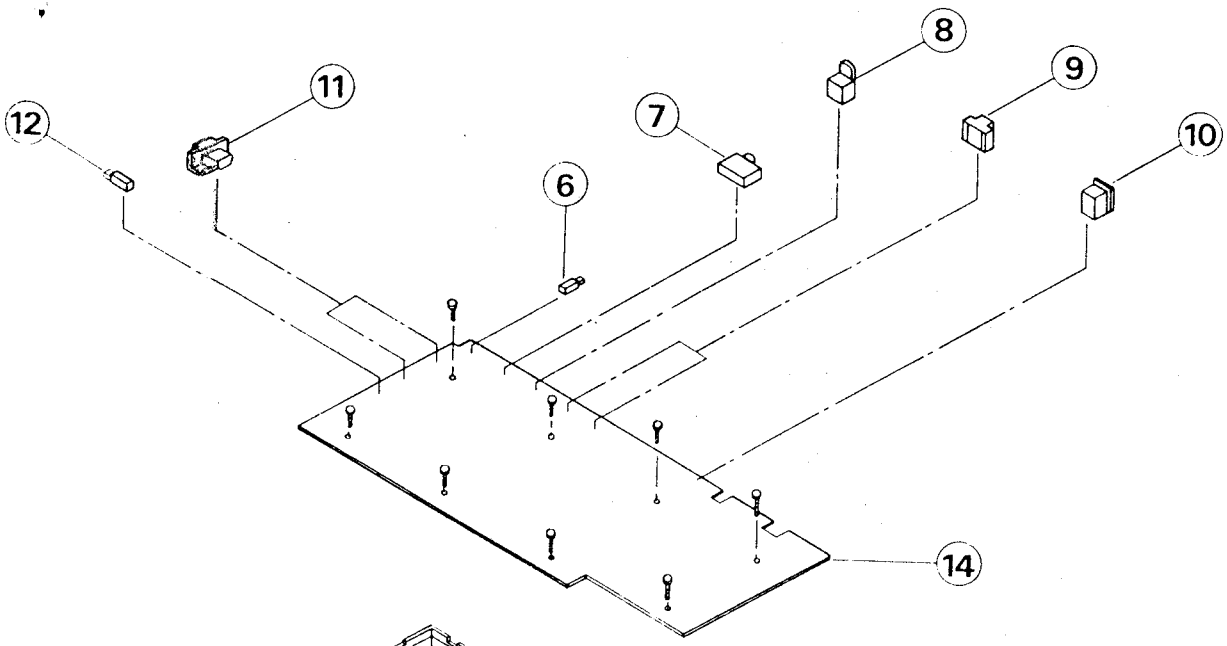

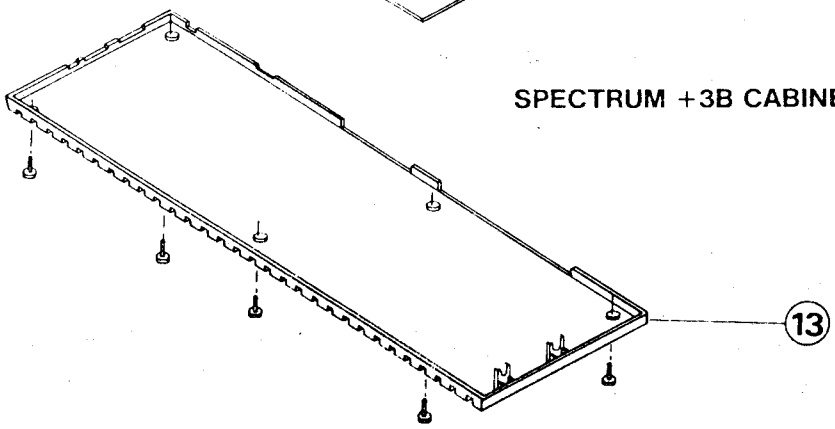

SPECTRUM +3B CABINET EXPLODED VIEW